FETCO®
www.fetco.com

User's Guide

Models:

- CBS-2051e
- CBS-2052e
- CBS-2052e20

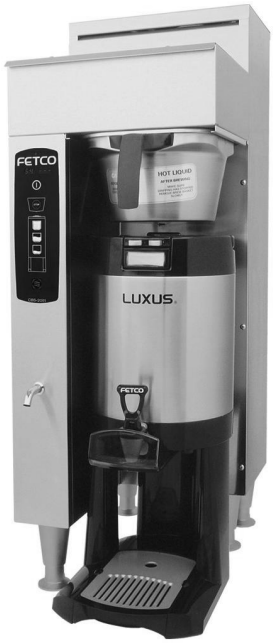

NOTICE TO INSTALLER: Please leave this book with the machine.

Driven To Pioneer Innovation™

Table of Contents

FETCO®, LUXUS®, EXTRACTOR®, INTERMITTENT BREW, and Driven To Pioneer Innovation™ are trademarks or trade names of Food Equipment Technologies Company.

© 2009 Food Equipment Technologies Company

Part # P021 REV. 002

Contact Information

FETCO®
Food Equipment Technologies Company
600 Rose Road
Lake Zurich • IL • 60047-0429 • USA

Website: www.fetco.com

Service & Support:
Hours: 7:00 AM - 6:00 PM Central, Monday - Friday
Phone: (800) 338-2699 (US & Canada)
(847) 719-3000
Fax: (847) 719-3001
Email: techsupport@fetco.com

Description & Features

The CBS-2050e Series coffee brewers feature our patented intermittent spray over technology, which works like this:

The following variables are programmed for each batch size:

- Brew volume
- Brew time
- Bypass percent (Percentage of the brew volume)
- Prewet percent (Percentage of the brew volume)
- Prewet delay (The time between prewetting and the brew cycle.)
- Drip delay (The time between the end of the brew cycle and the unlocking of the brew basket.)

Using these variables, the software calculates how much water to use for prewetting, bypass, and brewing. The total brew time is divided into several 30 second cycles. Within these cycles, the software calculates how long to spray water over the coffee grounds, and how long to pause before the next cycle begins. The bypass valve opens at the beginning of the brew cycle and dispenses the correct amount of water all at once.

Features

- Three fully programmable batch sizes per side
- Adjustable prewetting cycle
- Adjustable bypass
- Electronically controlled hot water service
- Brew basket safety locks
- Brew temperature protection
- Universal wiring – single or three phase

Specifications

Requirements

- **Water Requirements:**
  CBS-2051e: 20-75 psig, 1 gpm
  CBS-2052e: 20-75 psig, 1 ½ gpm
  CBS-2052e20: 20-75 psig, 1 ½ gpm
- **Electrical:** See electrical configuration chart.
- **Coffee Filters:** 15” X 5 ½ ” FETCO Product # F001

Weights and Capacities

Brewer Model	Weight (empty)	Water tank Capacity & Weight.		Weight (filled)	*Dispenser Weight, ea.	*Dispenser Filled, ea..	*Total Weight Brewer & Dispensers, Filled
CBS-2051e	55 lbs.	5.5 gal.	46 lbs.	81 lbs.	10.5 lbs.	23 lbs.	104 lbs.
CBS-2052e	92 lbs.	10.3 gal.	86 lbs.	178 lbs.	10.5 lbs.	23 lbs.	224 lbs.
CBS-2052e20	95 lbs.	10.3 gal.	86 lbs.	181 lbs.	11.5 lbs.	28 lbs.	237 lbs.

** Based on L3D Series Dispensers*

Electrical Configuration and Brewing Efficiency

US & Canada

CBS-2051e

1.5 gallons per batch

Electrical Config. Code	Heater Configuration	Voltage (AC)	Phase	Wires	KW	Maximum Amp draw	Batches per Hour* (max 11) Cold Water	Hot Water
E51016	2 X 3 KW	120/208	single	3 + ground	4.6	22.1	7.7	11.0
		120/220			5.1	23.4	8.6	11.0
		120/240			6.1	25.5	10.3	11.0

CBS-2052e

1.5 gallons per batch

Electrical Config. Code	Heater Configuration	Voltage (AC)	Phase	Wires	KW	Maximum Amp draw	Batches per Hour* (max 22) Cold Water	Hot Water
E52016 Universal Wiring Total 3 X 3 KW Heaters	Option 1 2 X 3 KW (Factory Setting)	120/208	single	3 + ground	4.6	22.4	7.7	18.6
		120/220			5.1	23.7	8.6	20.8
		120/240			6.1	25.8	10.3	22.0
	Option 2 3 X 3 KW	120/208	three	4 + ground	6.9	19.5	11.5	22.0
		120/220			7.7	20.6	12.9	22.0
		120/240			9.1	22.5	15.4	22.0
E52026 Universal Wiring Total 3 X 5 KW Heaters	Option 1 2 X 5 KW	120/208	single	3 + ground	7.6	36.9	12.8	22.0
		120/220			8.5	39.0	14.4	22.0
		120/240			10.1	42.5	17.1	22.0
	Option 2 3 X 5 KW (Factory Setting)	120/208	three	4 + ground	11.4	32.0	19.2	22.0
		120/220			12.7	33.9	22.0	22.0
		120/240			15.1	36.9	22.0	22.0

CBS-2052e20

2.0 gallons per batch

Electrical Config. Code	Heater Configuration	Voltage (AC)	Phase	Wires	KW	Maximum Amp draw	Batches per Hour* (max 18) Cold Water	Hot Water
E53016 Universal Wiring Total 3 X 3 KW Heaters	Option 1 2 X 3 KW (Factory Setting)	120/208	single	3 + ground	4.6	22.4	5.8	14.0
		120/220			5.1	23.7	6.5	15.6
		120/240			6.1	25.8	7.7	18.0
	Option 2 3 X 3 KW	120/208	three	4 + ground	6.9	19.5	8.6	18.0
		120/220			7.7	20.6	10.1	18.0
		120/240			9.1	22.5	11.6	18.0
E53026 Universal Wiring Total 3 X 5 KW Heaters	Option 1 2 X 5 KW	120/208	single	3 + ground	7.6	36.9	9.6	18.0
		120/220			8.5	39.0	11.2	18.0
		120/240			10.1	42.5	12.8	18.0
	Option 2 3 X 5 KW (Factory Setting)	120/208	three	4 + ground	11.4	32.0	14.4	18.0
		120/220			12.7	33.9	16.5	18.0
		120/240			15.1	36.9	16.5	18.0

* Based on standard factory settings: 4.0 minute brew time; 0% prewet, 0% bypass; 200 F water.

Export

CBS-2051e

1.5 gallons per batch

Electrical Config. Code	Heater Configuration	Voltage (AC)	Phase	Wires	KW	Maximum Amp draw	Batches per Hour* (max 11) Cold Water	Hot Water
E51026	2 X 3 KW	220	single	2 + ground	5.1	23.4	8.9	11.0

CBS-2052e

1.5 gallons per batch

Electrical Config. Code	Heater Configuration	Voltage (AC)	Phase	Wires	KW	Maximum Amp draw	Batches per Hour* (max 22) Cold Water	Hot Water
E52036	2 X 3 KW	220	single	2 + ground	5.1	23.7	8.6	20.8

CBS-2052e20

2.0 gallons per batch

Electrical Config. Code	Heater Configuration	Voltage (AC)	Phase	Wires	KW	Maximum Amp draw	Batches per Hour* (max 18) Cold Water	Hot Water
E53036	2 X 3 KW	220	single	2 + ground	5.1	23.7	6.5	15.6

* Based on standard factory settings: 4.0 minute brew time; 0% prewet, 0% bypass; 200 F water.

Dimensions & Utility Connections

CBS-2051e

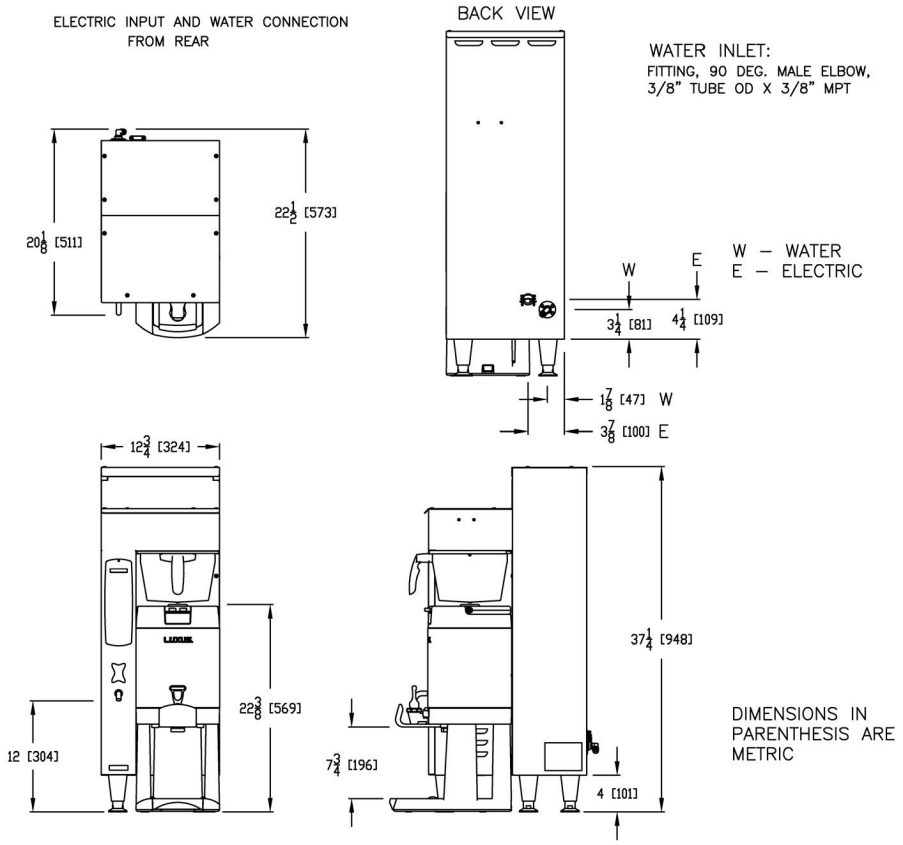

DWG 201100-000

CBS-2052e

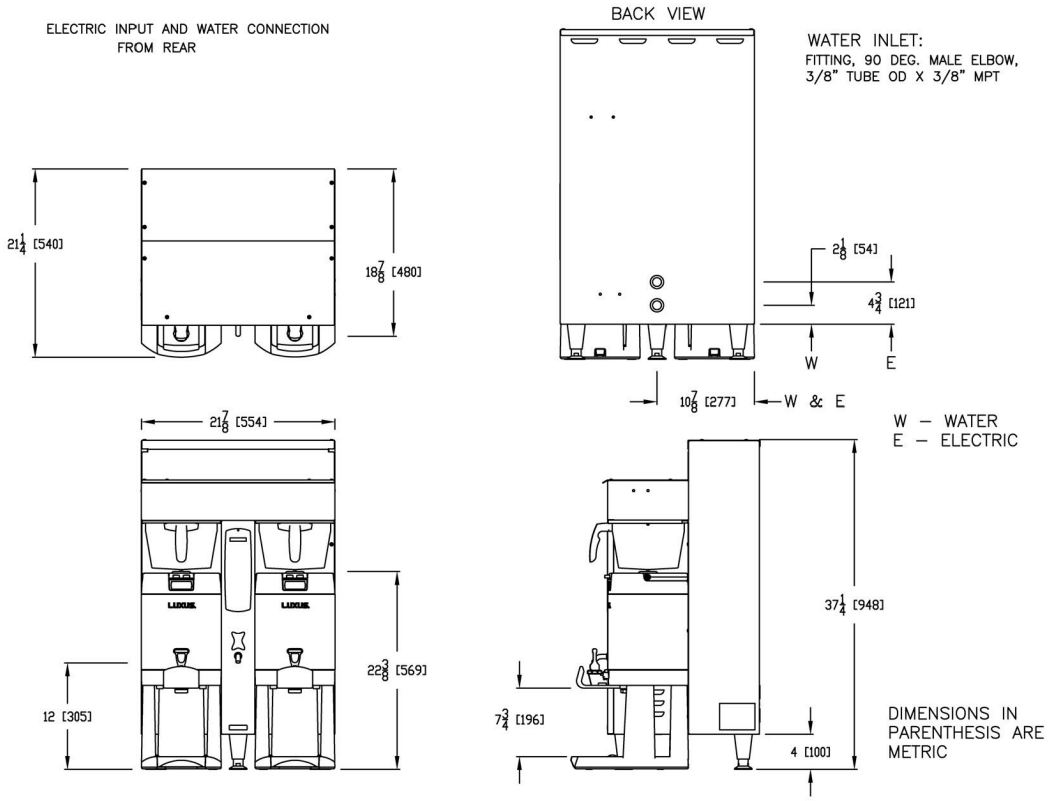

DWG 201101-000

CBS-2052e20

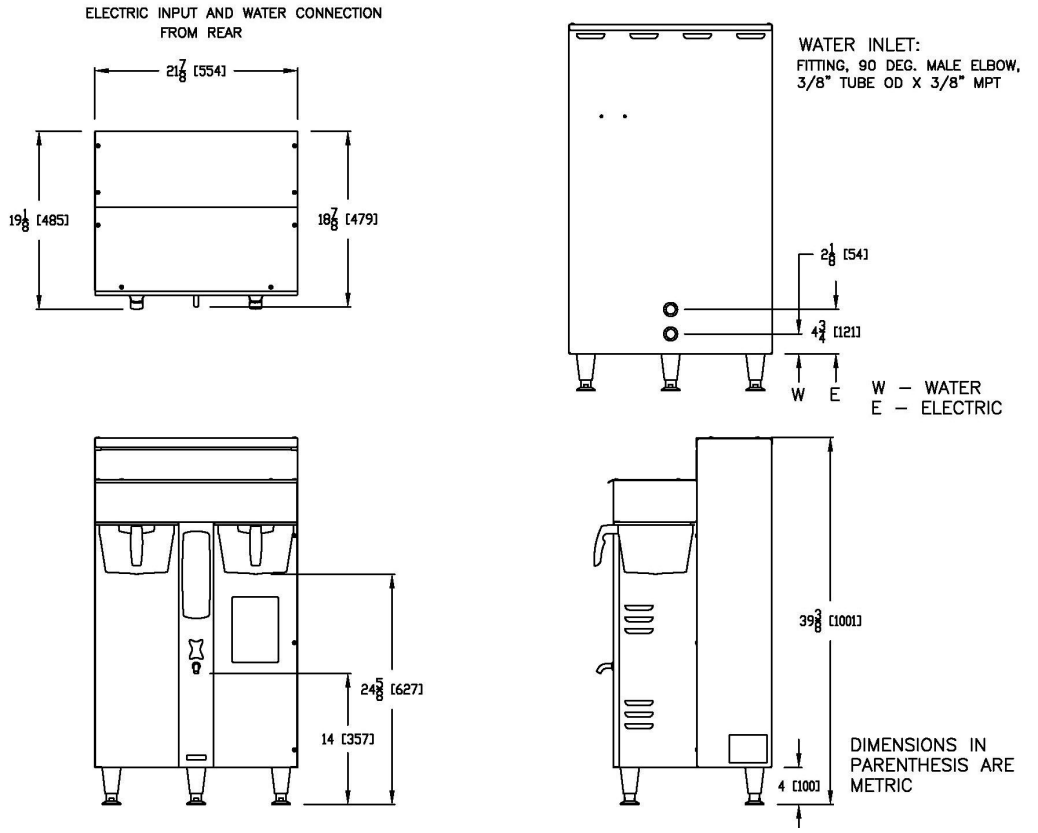

DWG 201129-000

Installation

(For Qualified Service Technicians Only)

Keys To A Successful Installation

If not installed correctly by qualified personnel, the brewer may not operate properly and damage may result. Damages resulting from improper installation are not covered by the warranty.
Here are the key points to consider before installation:

Electrical:

- All FETCO brewers require **NEUTRAL** unless equipped with an optional factory-installed step-down transformer. Ground is not an acceptable substitute for neutral. Installation without neutral may cause the brewer to malfunction.
- Universal wiring: Models CBS-2052e and CBS-2052e20 can be configured for single or three phase operation. Conversion instructions are described later in this section.
- The electrical diagram with universal wiring and step-down transformer instructions is located on the inside of the lower cover.
- The installation must comply with applicable federal, state, and local codes having jurisdiction at your location. Check with your local inspectors to determine what codes will apply.

Plumbing:

- This equipment is to be installed to comply with the applicable federal, state, or local plumbing codes.
- The water line must be flushed thoroughly prior to connecting it to the brewer to prevent debris from contaminating the machine.
- Verify that the water line will provide at least 1 gallon per minute for the CBS-2051e, and 1.5 gallons per minute for the CBS-2052e and 2052e20 before connecting it to the brewer.

General:

- Utilize only qualified beverage equipment service technicians for installation. A Service Company Directory may be found on our web site, **http://www.fetco.com**.

Installation Instructions

Brewer Setup

1. Review the Dimensions for the unit you are installing. Verify that the brewer will fit in the space intended for it, and that the counter or table will support the total weight of the brewer and dispensers when filled.
2. The brewer's legs are shipped inside the brew baskets. Remove the brew basket(s) and the coffee dispenser(s). Place the brewer on its back and screw in the legs.
3. Place the brewer on the counter or stand.
4. When the brewer is in position, level it front to back as well as side to side by adjusting the legs.
5. Remove the lower cover to access the water and electrical connections. Knock-outs are provided in the back and base of the brewer body for the connections.

Warning: Legs are to be adjusted for leveling the brewer only. Do not use for height adjustment or extend them higher than necessary.

Water Connection

1. Water inlet is a 3/8 inch male flare fitting.
2. The brewer can be connected to a cold or hot water line. Cold water is preferred for best coffee flavor, but hot water will allow for faster recovery times.
3. Install a water shut off valve near the brewer to facilitate service. If an in-line water filter is used, it should be installed after the water shut off valve and in a position to facilitate filter replacement.
4. Flush the water supply line and filter **before** connecting it to the brewer.
5. Verify that the water line will provide at least 1 gallon per minute for the CBS-2051e, and 1.5 gallons per minute for the CBS-2052e and 2052e20, and that the water pressure is between 20 and 75 psig.
6. Use a wrench on the factory fitting when connecting the incoming water line. This will reduce stress on the internal connections and reduce the possibility of leaks developing after the install has been completed.

NOTE: **Commonwealth of Massachusetts Specific Requirements.**
Requires Dual Check Backflow Prevention device for installation of commercial hot beverage equipment.
This device to be provided by the user.

Installation of commercial hot beverage equipment to be by Commonwealth of Massachusetts licensed plumber.
For assistance: http://www.mass.gov/dpl/home.htm (see "Check a license")

Electrical Connection

1. Verify that the actual voltage at the electrical service connection is compatible with the specifications on the brewer's serial number label. Make sure the electrical service includes **neutral**.
2. The temperature and water tank fill level are pre-set at the factory. There is no need to turn off the heaters during the installation process. The heaters are disabled by the control board until the tank is full of water. The heating process will start automatically when the tank has filled.
3. A terminal block is provided for connecting the incoming power wires. Consult local codes to determine if a cord and plug can be installed, or if the unit must be hard wired.
4. A fused disconnect switch or circuit breaker on the incoming power line must be conveniently located near the brewer, and its location and markings known to the operators.
5. The body of the brewer must be grounded to a suitable building ground. A ground lug is provided in the brewer next to the power terminal block. Use only 10 gauge copper wire for grounding.
6. Electrical connections must be secured in-place within the unit to meet national and local standards.

Warning: To prevent electrical shock, this unit must be properly grounded.

7. *Special instructions for brewers equipped with the optional step-down transformer:*
   The transformer is located inside the lower section of the brewer. Configure the black and white MOLEX connectors as shown below.

NEUTRAL WIRE REQUIRED	NEUTRAL WIRE NOT REQUIRED
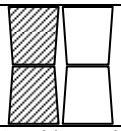	
Connect white-to-white and black-to-black. Transformer is disabled.	Connect white-to-black and black to white. Transformer is connected to control circuit.

Disconnect brewer from power supply before changing connections. DO NOT leave a MOLEX connector unattached – both pairs must be connected.

8. Connect the incoming power wires to the terminal block in accordance with applicable codes.

CBS-2051e

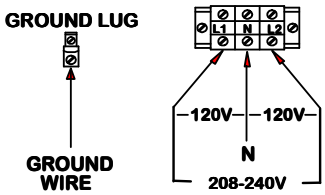

The **CBS-2052e** and **CBS-2052e20** are shipped from the factory configured for either single phase or three phase operation, depending on the version that was ordered. A tag attached to the terminal block will indicate which way the unit was configured.

Notice: The following conversion should be performed only by a qualified beverage equipment service technician or electrician.

<u>For brewers manufactured before August, 2005:</u>

To change the configuration, arrange the heater wires as shown below. Make sure that all connections are tight. These instructions are also located on the inside of the lower cover.

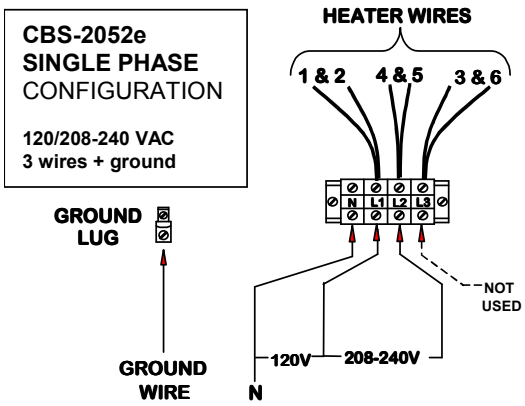

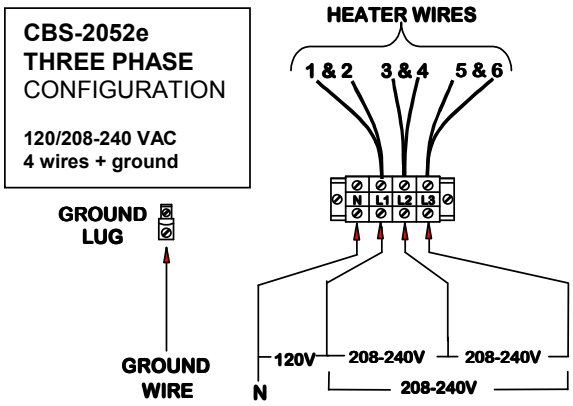

Incoming Power:	**Connect wires to L1, L2, N, Ground**
Heater Wires:	**Connect wires 1 & 2 to L1** **Connect wires 4 & 5 to L2** **Connect wires 3 & 6 to L3**

Incoming Power:	**Connect wires to L1, L2, L3, N, Grnd**
Heater Wires:	**Connect wires 1 & 2 to L1** **Connect wires 3 & 4 to L2** **Connect wires 5 & 6 to L3**

For brewers manufactured after August 1, 2005:

A jumper wire with instruction tag is provided (pictured at right).

Single Phase: Connect the jumper to L2 and L3.
Connect incoming wires to L1, L2, N, ground.

Three Phase: Do not use the jumper.
Connect wires to L1, L2, L3, N, ground.

When not used, the jumper should remain secured inside the brewer for future use.

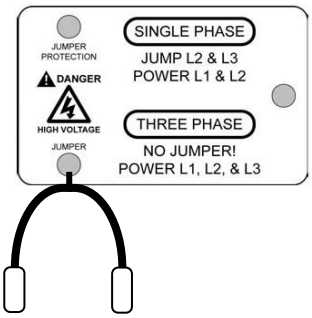

Final Setup

1. Turn on the incoming water supply line and inspect both inside and outside of the brewer for leaks in all fittings and tubes
2. Turn on the incoming power.
3. Press the brewer's main power switch, which is hidden behind the front leg of the brewer. The control panel on/off switch will begin flashing. Press this switch.
4. Within 6 seconds, the hot water tank will begin filling until the water is sensed by the probe at the top of the tank. The display will read "FIL". The heaters will be disabled by the control board until the tank is full.
5. While the water is heating, the display will read "LO" and the actual water temperature will be displayed. After the water has reached the set temperature, the display will be blank. There is no "ready" light.
6. Review the Operating Instructions. Brew one full batch (water only) on each side to confirm proper fill levels. The brewer is factory set with water only (no coffee) to dispense the correct amount of water. If the actual volume is slightly different from the programmed volume, fine tuning the brewer may be necessary. See #60 – 63 in the Advanced Settings & Diagnostics section.
7. Re-attach the covers after one final inspection for leaks. Look closely in the top of the brewer at the dispense fittings during this inspection.

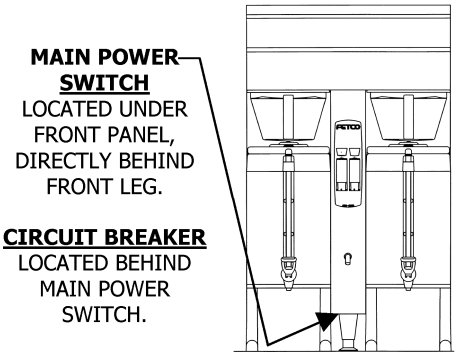

Operator Training

Review the operating procedures with whoever will be using the brewer. Pay particular attention to the following areas:

1. Always pre-heat the dispensers before the first use of each day by filling them half way with hot water, and letting them stand for at least 15 minutes.
2. Don't remove the brew basket until it has stopped dripping.
3. Make sure the dispenser is empty before brewing into it.
4. Show how to attach covers, close, and or secure the thermal dispensers for transporting.
5. Show the location and operation of the water shut off valve as well as the circuit breaker for the brewer.
6. Steam from the tank will form condensation in the vent tubes. This condensation will drip into and then out of the brew baskets. 1/4 cup discharging overnight is possible. Place an appropriate container under each brew basket when not in use.
7. We recommend leaving the power to the brewer on overnight. The water tank is well insulated and will use very little electricity to keep the tank hot. Leaving the brewer in the on position will also avoid delays at the beginning of shifts for the brewer to reach operating temperature.

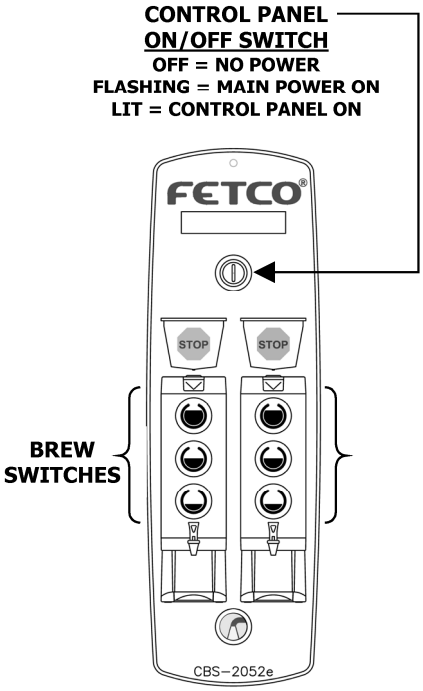

Operating Instructions

Control Panel Functions

Only switches that are active are illuminated.
Switches that are inactive or disabled are invisible.

❶ Main Power Switch

- ❑ Controls all power to brewer
- ❑ Indicator lamp at top of panel.

❷ Control Panel On/Off Switch

- ❑ Secondary power switch. Does not disconnect main power.
- ❑ Flashing = Off
- ❑ Lit = On
- ❑ Invisible = Main Power Off

❸ Display

- ❑ **"FIL"** = Water tank is filling.
- ❑ **"LO XXX"** = Unit is heating, not ready to brew. (XXX = actual temperature)
- ❑ **"NO BAS"** = Brew basket not in position.
- ❑ Blank = Ready to brew.
- ❑ Also displays error messages.

❹ Stop Switches

- ❑ Stops brew cycle
- ❑ Lit = Brew cycle in progress
- ❑ Invisible = Not brewing, or dripping in progress

❺ Brew Switches

- ❑ Starts brew cycle
- ❑ Must be held in for 1 second
- ❑ Flashing = Brew cycle in progress
- ❑ Lit = Ready to brew
- ❑ Invisible – Not ready to brew, or batch disabled (See Programming Section)

❻ Hot Water Switch

- ❑ Dispenses hot water from faucet
- ❑ Hold in to dispense

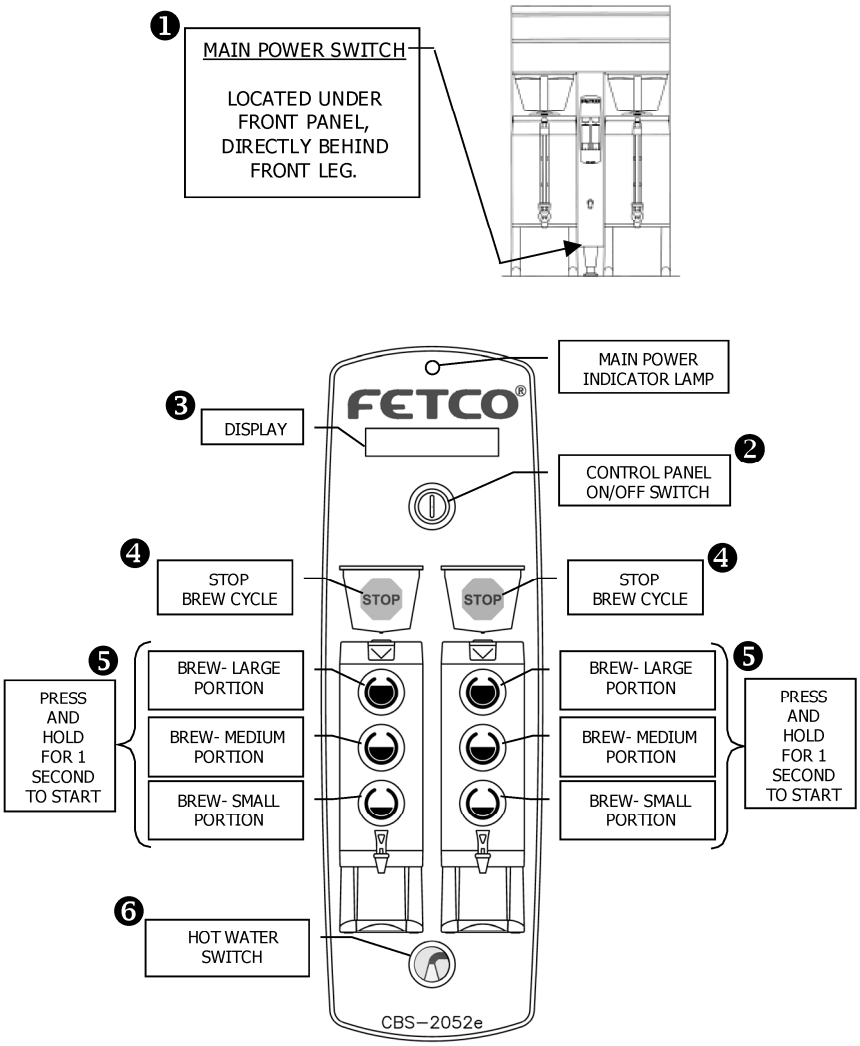

Brewing

1. Turn the main power switch and control panel switch on.
2. Prepare a brew basket with the correct size filter and appropriate amount of coffee.
3. Slide the brew basket completely into the rails.
4. Place a clean, empty, preheated dispenser under the brew basket.
5. Select a batch from the available choices, and hold the corresponding BREW button in for 1 second to start the brew cycle.
6. The STOP button will illuminate, and the selected BREW button will flash, indicating that brewing is in progress. All other BREW buttons will extinguish.
7. When the brew cycle is finished, the STOP button will extinguish and the BREW button will continue flashing, indicating that coffee may still be dripping from the bottom of the brew basket.
8. Before removing the brew basket or dispenser, visually verify that dripping has stopped.

Notes:

- ❑ Preheat dispenser by filling at least ½ full with water at brewing temperature. Allow it to sit for at least 15 minutes before draining.
- ❑ A sensor will prevent the brewer from operating if the brew basket is not all the way in.
- ❑ A brew basket lock will prevent removal of the brew basket during brewing and dripping

Programming

Batch Settings

Display

- Turn the brewer off by pressing the main power switch.
- Press the main power switch again to turn the unit on. The last 2 digits of the model number will display briefly, then **S t b**. — **52** / **S t b**
- Quickly hold the **STOP** button for 3 seconds. — **P r G**
- The display will show the software version. Example: — **0.0 4.8**
- Press **STOP** to continue.
- Batches are numbered 1 – 3 (CBS-2051e) or 1 – 6 (CBS-2052e / 2052e20)

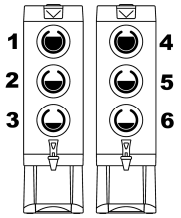

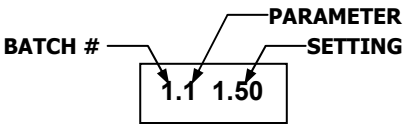

Example:
Left Side – Large Batch – Volume 1.5 Gal.

- Next, the first batch parameter is displayed – batch 1, brew volume — **1.1 1.50**
  Use the **SCROLL UP** and **SCROLL DOWN** buttons to adjust.
  Press the **STOP** button to go to the next parameter – brew time. — **1.2 4.00**
- Continue this way until all parameters are programmed for batch #1. (See the chart below for an explanation of each parameter.)
- Next, batch #2 programming begins. — **2.0 OFF**
  Batches 2, 3, 5, and 6 may be disabled by leaving them set to **"OFF".** Change to **"ON"** to enable. Batches 1 and 4 cannot be disabled.
- After all batches are programmed, go to temperature settings. — **7 200**

(See next page)

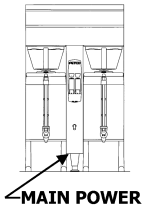

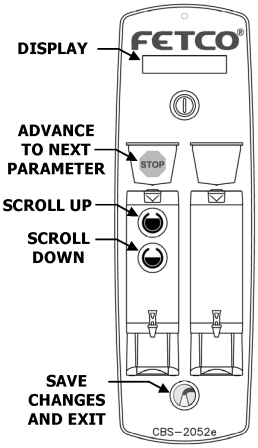

Important! After programming, you must press the **HOT WATER** button to save the settings and exit programming mode, or changes will be lost. You may exit programming at any time.

Batch Parameters

X=Batch Number (1 - 6)

Parameter	Name	Range	Increment	Default Setting	Comment
X.0	Batch Enabled or Disabled	On/Off		Batch 1 & 4 = ON Batch 2, 3, 5, 6 = OFF	Batch 1 & 4 cannot be disabled.
X.1	Brew Volume (Gallons)	0.25 – 3.00	0.01	1.5 gal. (2051e/2052e) 2.0 gal. (2052e20)	To display liters, see # 59 in Advanced Settings section.
X.2	Brew Time (Min:Sec)	2:00 – 24:00	0:30	4:00 minutes	
X.3	Bypass Percent	0.00 – 40.0%	1%	0 %	Percentage of total brew volume
X.4	Prewet Percent	0.00 – 15.0%	1%	0 %	Percentage of total brew volume
X.5	Prewet Delay (Min:Sec)	0:10 – 5:00	0:10	1:00 minute	The time between prewetting and start of brew cycle.
X.6	Drip Delay (Min:Sec)	0:30 – 6:00 Minutes	0:10	1:30 minute	The time between end of brew cycle and unlocking of brew basket.

Temperature Settings

Parameter	Name	Range	Default Setting	Comment
7	Water Temp. (°F)	180°F - 208°F	200°F	Inside tank. Will be slightly lower at spray head. To display in ° Celsius, see # 58 in Advanced Settings.
8	Hot Water Service	A (auto) / On / Off	A (auto)	A= Faucet will dispense only when not brewing. On=Faucet always enabled. Off=Faucet always disabled.
9	Brew at Set Temperature	0 - 1	1	0=Will brew at any temperature 1=Will brew only at set temperature. Note: Changes will not take effect until one full brew cycle is completed after the change is made.

Parameter	Name	Range	Default Setting	Comment
10	Enter Advanced Settings & Diagnostics	0 - 1	0	0 = Skip Advanced Settings & Diagnostics. Loop back to start of batch programming cycle. 1 = Enter Advanced Settings & Diagnostics. Press **STOP** to continue

Important! To save your changes, press to exit programming mode and return to operating mode.

Advanced Settings and Diagnostics

Address	Description	Range	Default	Comment
50	Water Level in Tank	0 - 1		Tests if water is touching probe. 0 = Tank is less than full 1 = Tank is full
52	Brew Basket Sensor State (left / right)	0 - 1		To test, slide the brew basket in and out. Display should toggle between 0 and 1. 0 = Brew basket out. 1 = Brew Basket in.
55	Tank Temperature	180°F - 208°F		Displays current tank temperature.
56	Brewer Model Number	31 - 52		Must be set for the correct model number of the brewer: 51 for CBS-2051e, 52 for CBS-2052e and CBS-2052e20.
57	Reload Defaults	0 - 1	0	Changes all settings to default factory settings. 0 = Do not reload defaults 1 = Reload all default settings If 1 is selected, you must advance to the next address for this change to take effect. Does not change address 56 – model number.
58	Temperature Scale	F or C	F	F = Displays temp in degrees Fahrenheit C = Displays temp in degrees Celsius
59	Water Volume Scale	GAL or LTR	GAL	GAL = Displays volume in gallons LTR = Displays volume in liters

Address	Description	Range	Default	Comment
60 and 61	Left Brew Valve Flow Rate Right Brew Valve Flow Rate	0.09 – 1.49 ***If #59 is GAL*** or 0.33 – 5.63 ***If #59 is LTR***	0.92 3.48	Use this to compensate for minor discrepancies in actual volume versus programmed volume. Set lower to increase volume, higher to decrease volume. The following formula can be used to determine the correct setting: $\frac{\text{ACTUAL VOLUME}}{\text{PROGRAMMED VOLUME}} \times \text{CURRENT SETTING} = \text{NEW SETTING}$
62 and 63	Left Bypass Valve Flow Rate Right Bypass Valve Flow Rate	0.28 – 0.38 **If #59 is GAL** or 1.05 – 1.44 **If #59 is LTR**	0.33 1.24	
64	Keypad Test	0 - 1	0	Tests function of control panel switches. 0 - Skip keypad test 1 - Keypad test active Starting at the stop buttons, press each button that is lit. The display will show the name of the switch being pressed. Brew switches are named S1, S2, S3, etc. The hot water switch must be pressed last, as this will exit the test.
65	Relay Test	0 - 1	0	0 - Skip relay test. Loop back to #50 1 – Relay test active. Press **STOP** to continue

Press to save the settings and exit Diagnostic mode.

Press again to exit Programming mode and return to Operating mode.

Relay Test

Tests the individual relays which control various components. Use either batch button to actuate the relays.

Warning: During these tests, hot water may be dispensed from the valve being tested.

To begin, you must first press the blinking Control Panel Power Switch.

Address	Description	Comment
90	Left or Single Brew Valve	
91	Right Brew Valve	
92	Left or Single Bypass Valve	
93	Right Bypass Valve	
94	Hot Water Faucet	
95	Fill Valve	
96	Heater	To protect the heaters, this test will work only if the tank is full.
97	Left or Single Brew Basket Lock	
98	Right Brew Basket Lock	

Press to exit Relay Test.

Press again to exit Diagnostic mode.

Press again to exit Programming mode and return to Operating mode.

Error Codes

Code	Description	Possible Cause	Corrective Action	How to Clear Error Codes
001	Internal Error System had to reload default settings.	Control board failure.	Clear error. Re-program the brewer to the desired specifications. If error occurs again, replace control board.	Turn main power switch off and on.
050	Shorted temperature probe.	Probe failure.	Replace probe.	Turn main power switch off and on.
051	Open temperature probe.	Bad probe connection, or probe failure.	Check all connections. Replace probe if necessary.	Turn main power switch off and on.
075	Brew basket lock or sensor failure. Basket was in place when brew cycle started, but was pulled out during the brew cycle. If this error occurs, the brew basket lock has failed.	Brew basket sensor or lock has failed.	Repair or replace brew basket sensor or lock.	Press the flashing control panel power switch to resume operation.
		Magnet in brew basket handle is missing or loose.	Remove brew basket handle. Place magnet in correct position.	
100	Initial Fill Error Initial fill time was more than 15 minutes.	Water supply flow rate is too low.	Watch for short potting during brew cycle. Investigate cause of low flow rate. (Clogged water filter, etc.)	Press the control panel power switch.
101	Error on refill Tank did not refill within 3 minutes.	Water supply flow rate is too low.	Watch for short potting during brew cycle. Investigate cause of low flow rate. (Clogged water filter, etc.)	Error message is cleared automatically at end of brew cycle.
102	Unwanted Fill When brewer is idle, the fill valve was activated for more than 30 seconds during a 1 hour period.	Possible leak in tank, fitting, or valve.	Check inside of machine for leaks.	Turn main power switch off and on.
		Output on control board has failed, causing a dispense valve to open.	Replace control board.	
200	Flat Line Temperature (Water is boiling) System is calling for heat, but the temperature does not rise at least 2°F within 10 minutes.	Triac is stuck closed, bad output on control board, or temperature is set too high for altitude.	Check triacs, check control board output, or adjust temperature for altitude.	Turn main power switch off and on.
201	Heater Open System is calling for heat, but the temperature does not rise at least 2°F within 10 minutes. This error is disabled during brewing and while using the hot water faucet.	Heating element failure.	Check and replace heating elements if necessary.	Turn main power switch off and on.
202	Heater Short System is not calling for heat, but temperature rises more than 5°F.	Possible triac stuck closed, or bad output on control board.	Check triac and control board.	Enter programming mode, then exit programming mode.
255	Keypad Error A switch was pressed for more than 45 seconds.	Switch was held in too long, or switch is stuck closed.	Clear error and try again. If error occurs without switch being pressed, replace input board.	Turn main power switch off and on.

Cleaning & Maintenance

Daily: Wipe the area above the brew basket to remove coffee residue.

Daily or Weekly:

CSD Versions:

Clean the Cascading Spray Dome (CSD) with a soft brush and detergent. It may also be cleaned in a dishwasher – top rack only.

The CSD is held in place by four magnets. To remove it, grasp the bottom and pull down.

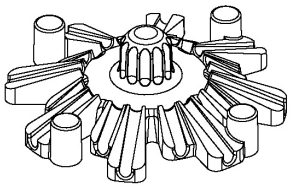

CSD

Spray Plate Versions:

The spray plate should be removed and cleaned to remove hard water deposits. In areas with extremely hard water, it may be necessary to do this daily. Weekly cleaning may be sufficient in some areas.

When cleaning the spray plate, make sure that each hole is completely free of mineral deposits. Use a toothpick to clean out each hole. Never use metal objects or abrasives on the spray plate's Teflon coating.

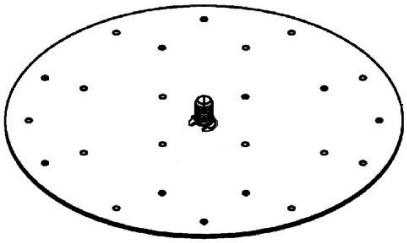

SPRAY PLATE

Quarterly:

- Check water temperature, adjust if necessary.
- Check brew levels, adjust if necessary.
- Inspect all fittings and hoses for leaks.
- Inspect inside of tank for lime deposits. De-lime tank and probes if necessary. This procedure should be done by a qualified service technician.

Parts

Figure 1 – CBS-2051e Main Assembly

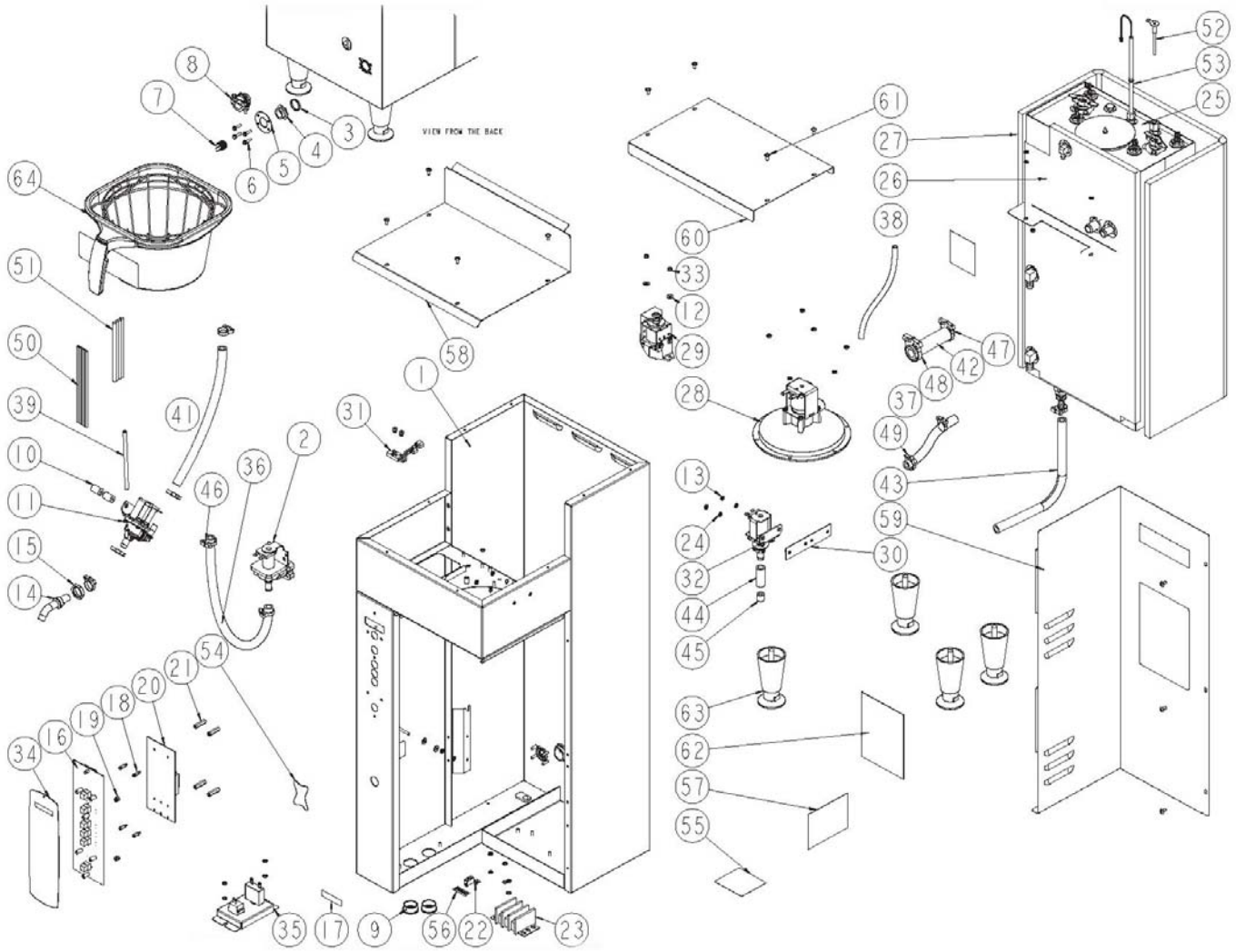

DWG 101191-B

ITEM #	QTY	PART #	NEW PART #	DESCRIPTION	
1	1	001049		WELDMENT CBS-2051e	
2	1	57006		FILL VALVE, S-53 120VAC	
2	1	57017		FILL VALVE, S-53 220VAC	EXPORT 220V ONLY
2	1	57090		FILL VALVE, S-53 200VAC	Japan 200V ONLY
3	1	24012	1024.00020.00	GASKET, S-53 FILL VALVE	
4	1	31078	1031.00004.00	FITTING, S-53 FILL VALVE INLET	
5	1	03074	1003.00019.00	BRACKET, S-53	
6	4	82020	1082.00019.00	SCREW, S-53 FILL VALVE	
7	1	31031	1031.00005.00	FITTING, 90° MALE ELBOW, 3/8 TUBE OD X 3/8 MPT	
8	1	86040	1086.00008.00	CONNECTOR, CABLE CLAMP, 3/4"	
9	2	86032	1086.00004.00	BUSHING, SNAP, 1" MOUNTING HOLE DIA	
10	2	29020	1029.00007.00	SPACER, HOT WATER VALVE	
11	1	102192	1102.00108.00	ASSEMBLY, HOT WATER VALVE, 120VAC	
11	1	102193	1102.00130.00	ASSEMBLY, HOT WATER VALVE, 220VAC	EXPORT 220V ONLY
11	1	102228	1102.00129.00	ASSEMBLY, HOT WATER VALVE, 200VAC	Japan 200V ONLY
11		57073	1057.00014.00	VALVE REBUILD KIT, DSV11. (PLUNGER, SPRING, AND DIAPHRAGM)	
12	4	83051	1083.00016.00	WASHER, #8 SCREW SIZE, FLAT	
13	20	84002	1084.00006.00	NUT, HEX, #8-32 MACHINE SCREW	
14	1	002065	1112.00093.00	WELDMENT, HOT WATER FAUCET	
15	1	33007	1013.00030.00	LOCKNUT, 7/16 STRAIGHT PIPE THREAD	
16	1	108003		SWITCHING/ CONTROL BOARD, 6 KEYS, S3P	
17	1	46029	1046.00019.00	LABEL, POWER SWITCH	

18	4	15007	1084.00023.00	STANDOFF, MALE-FEMALE, THREADED HEX 4-40-1/2"	
19	4	29007	1029.00006.00	NUT, #4-40 KNURLED THUMB	
20	1	51042	1051.00011.00	BOARD, POWER SUPPLY-120VAC	
20	1	51055		BOARD, POWER SUPPLY-220VAC	EXPORT 220V ONLY
20	1	51056		BOARD, POWER SUPPLY-200VAC	Japan 200V ONLY
21	4	29019	1029.00012.00	SPACER, .25" HEX x 1" LG., FEM, #4-40 THREAD	
22	1	65002	1065.00002.00	CONNECTOR, COPPER LUG	
23	1	52050		TERMINAL BLOCK	
24	12	83026	1083.00011.00	WASHER, INTERNAL TOOTH LOCK, #8 SCREW SIZE,	
25	1	104029		ASSEMBLY, TANK CBS-2051e	
26	1	22057		INSULATION TANK FRONT CBS-2051	
27	1	22058		INSULATION TANK REAR CBS-2051	
28	1	102102		ASSEMBLY, LARGE SPRAY HEAD, 120V (SEE FIG. 5)	
28	1	102159		ASSEMBLY, LARGE SPRAY HEAD, 220V (SEE FIG. 5)	EXPORT 220V ONLY
29	1	101160	1102.00047.00	ASSEMBLY, BREW BASKET LOCK. 120 VAC	
29	1	101174	1102.00135.00	ASSEMBLY, BREW BASKET LOCK. 220 VAC	EXPORT 220V ONLY
30	1	102147	1112.00094.00	WELDMENT, BRACKET BY-PASS VALVE	
31	1	102207	1102.00113.00	ASSEMBLY, REED SWITCH	
32	1	57044	1057.00020.00	VALVE, BYPASS LEFT 120 VAC	
32	1	57077	1057.00029.00	VALVE, BYPASS LEFT 220 VAC	EXPORT 220V ONLY
32		57073	1057.00014.00	VALVE REBUILD KIT, DSV11. (PLUNGER, SPRING, AND DIAPHRAGM)	
33	2	84030	1084.00015.00	LOCKNUT, #8-32 SCREW SIZE, HEX THIN NYLON INSERT	
34	1	45081		OVERLAY, CBS-2051e	
35	1	102189	1102.00106.00	ASSEMBLY, POWER BRACKET, CBS-2000e	
35	1	52026	1052.00007.00	CIRCUIT BREAKER, 5A	
35	1	58054	1058.00014.00	SWITCH, PUSH BUTTON	
36	1	25090		TUBE, 5/8"OD X 3/8"ID X 17"LG, COLD WATER	
37	1	25044	1025.00023.00	TUBE, 5/8"OD X 3/8"ID X 7.5"LG, BY-PASS	
38	1	25042	1025.00025.00	TUBE, 1/2"OD X 1/4"ID X 7 1/2" LG, VENT	
39	1	25104	1025.00026.00	TUBE, 1/4"X11/8"X25"LG, VENT HOT WATER VALVE	
40	1	25105	1025.00027.00	TUBE, 5/8"OD X 3/8"ID X 2.5"LG, HOT WATER VALVE OUTLET	
41	1	25106	1025.00028.00	TUBE, 5/8"OD X 3/8"ID X 11"LG, HOT WATER VALVE INLET	
42	1	25045	1025.00021.00	TUBE, 31/32"OD X 5/8"ID X 4 1/4" LG, BREW	
43	1	25046	1025.00010.00	TUBE, 5/8"OD X 3/8"ID X 15"LG, DRAIN	
44	1	25060	1025.00022.00	TUBE 5/8"OD X 3/8"ID X 1.5"LG, BY-PASS	
45	1	25061	1025.00024.00	TUBE 1/2"OD X 1/4"ID X 1/2""LG, BY-PASS	
46	6	86007	1086.00001.00	CLAMP, HOSE, .593"-.656" DIA RANGE	
47	1	86036	1086.00018.00	CLAMP, HOSE, .875"-1.0" DIA RANGE	
48	1	86039	1086.00017.00	CLAMP, HOSE, 1.031"-1.187" DIA RANGE	
49	3	86038	1086.00002.00	CLAMP, HOSE, .670"-.780" DIA RANGE	
50	1	402016		HARNESS, ELECTRICAL, MAIN CBS-2051e	
51	1	402030		HARNESS, ELECTRICAL, TWO HEATER WIRE SET CBS-2051e	
52	1	102202		ASSEMBLY, WATER LEVEL PROBE, CBS-2040, -50e	
53	1	102172	1102.00010.00	ASSEMBLY, PROBE DIGITAL TEMPERATURE 8.0" LG	
54	1	41016	1041.00004.00	LABEL, EXTRACTOR	
55	2	44024	1044.00004.00	LABEL, WARNING-HIGH VOLTAGE	
56	1	44004	1044.00003.00	LABEL GROUND	
58	1	01501		COVER, UPPER BASE CBS-2051e	
59	1	102194	1102.00105.00	ASSEMBLY, RIGHT COVER CBS-2050e'S	
60	1	01502		COVER, TOP CBS-2051e	
61	11	82059	1082.00023.00	SCREW, #8-32 X 3/8 TRUSS HD PHIL., MACHINE	
62	1	401213		WIRING DIAGRAM, CBS-2051 UNIV. WIR. 1PH, 3WIR+GR, 2 HEAT.	
63	4	73011	1073.00007.00	LEG, FLANGE FOOT, 4" HIGH	
64	1	101165	B001280B1	ASSEMBLY, BREW BASKET, 16" X 6", DIA HOLE 0.280" (SEE FIG.6)	

Figure 2 – CBS-2051e Tank Assembly

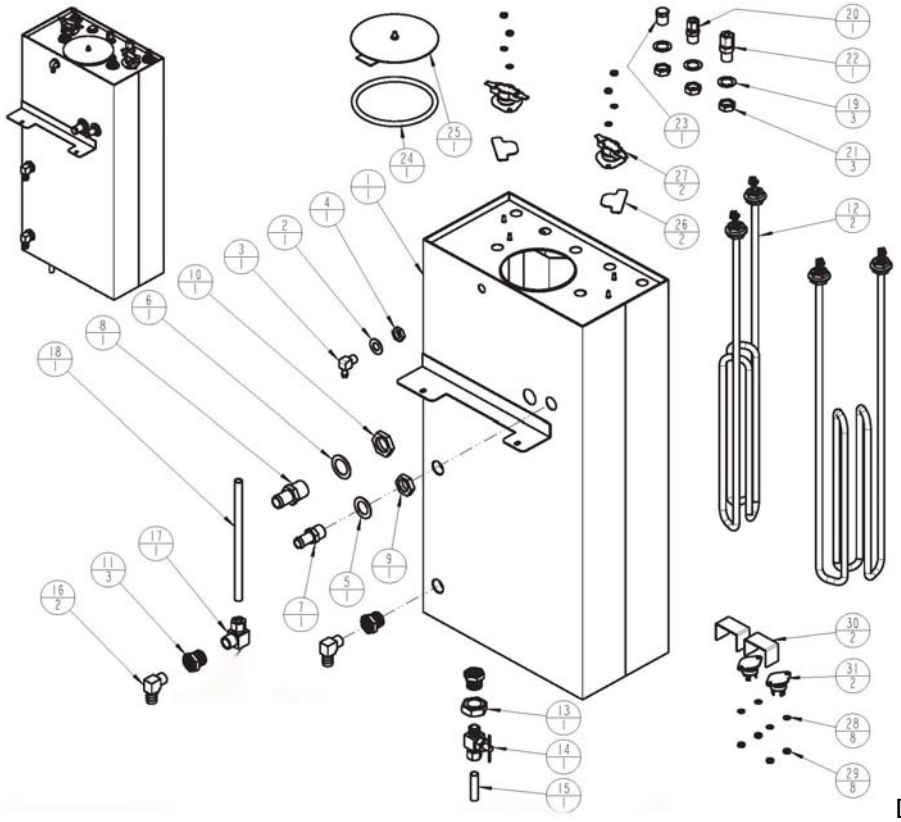

DWG 104029-C

ITEM #	QTY	OLD PART #	NEW PART #	DESCRIPTION
1	1	4039		WELDMENT, TANK CBS-2051e
2	1	83041	1083.00014.00	WASHER, .812"OD X .412"ID, FLAT
3	1	31005	1031.00032.00	FITTING, 90 ELBOW, 1/4 HOSE ID X 1/8 MPT
4	1	31116	1031.00020.00	LOCKNUT 1/8 STRAIGHT PIPE THREAD
5	1	83043	1083.00007.00	WASHER, 1.125"OD X 0.688"ID FLAT
6	1	83048	1083.00032.00	WASHER, 1.250"OD X 0.835"ID FLAT
7	1	31077	1031.00028.00	FITTING, 3/8 HOSE ID X 3/8 MPT
8	1	31150	1031.00027.00	FITTING, 5/8 HOSE ID X 1/2 MPT
9	1	31118	1031.00033.00	LOCKNUT 3/8 STRAIGHT PIPE THREAD
10	1	31151	1031.00034.00	LOCKNUT 1/2 STRAIGHT PIPE THREAD
11	3	31021	1031.00029.00	BUSHING, 3/4-16 X 1/4 NPSM, HEX HEAD
12	2	107002		HEATER ASSY., 3000W, 240VAC
13	1	84007	1084.00022.00	NUT, 3/4-16 HEX JAM
14	1	25110		VALVE, DRAIN (REQUIRES # 25111 TUBE)
15	1	25111		TUBE, VALVE DRAIN
16	2	31128	1031.00031.00	FITTING, 90° ELBOW, 3/8 HOSE ID X 1/4 MPT
17	1	31027	1031.00030.00	FITTING, COMPR 90° MALE ELBOW, 3/8 TUBE OD X 1/4 MPT
18	1	13072	1013.00045.00	OUTLET, INSIDE TANK HOT WATER
19	3	83042	1083.00006.00	WASHER, .875"OD X .562"ID, FLAT
20	1	31036		FITTING COMPR. MALE CONNECTOR 1/4 TUBE OD X 1/4 MPT
21	3	31117	1031.00007.00	LOCKNUT 1/4 STRAIGHT PIPE THREAD
22	1	25098	1025.00001.00	FITTING, COMPRESSION MALE CONNECTOR
23	1	31081		PLUG, HEX HEAD 1/4" MPT
24	1	24002	1024.00007.00	O-RING, TANK COVER
25	1	102013	1102.00007.00	ASSEMBLY, TANK COVER
26	2	3332		BRACKET 2, ONE SHOT THERMOSTAT
27	2	53071	1053.00004.00	THERMOSTAT, SINGLE SHOT,TRIAC
28	8	83011	1083.00009.00	WASHER, #6 SCREW SIZE, INTERNAL
29	8	84001	1084.00012.00	NUT, HEX, #6-32 MACHINE SCREW
30	2	3297		SINK, HEAT FOR 40A TRIAC
31	2	59008	1059.00001.00	TRIAC 40A, 600V

Figure 3 – CBS-2052e / 2052e20 Main Assembly

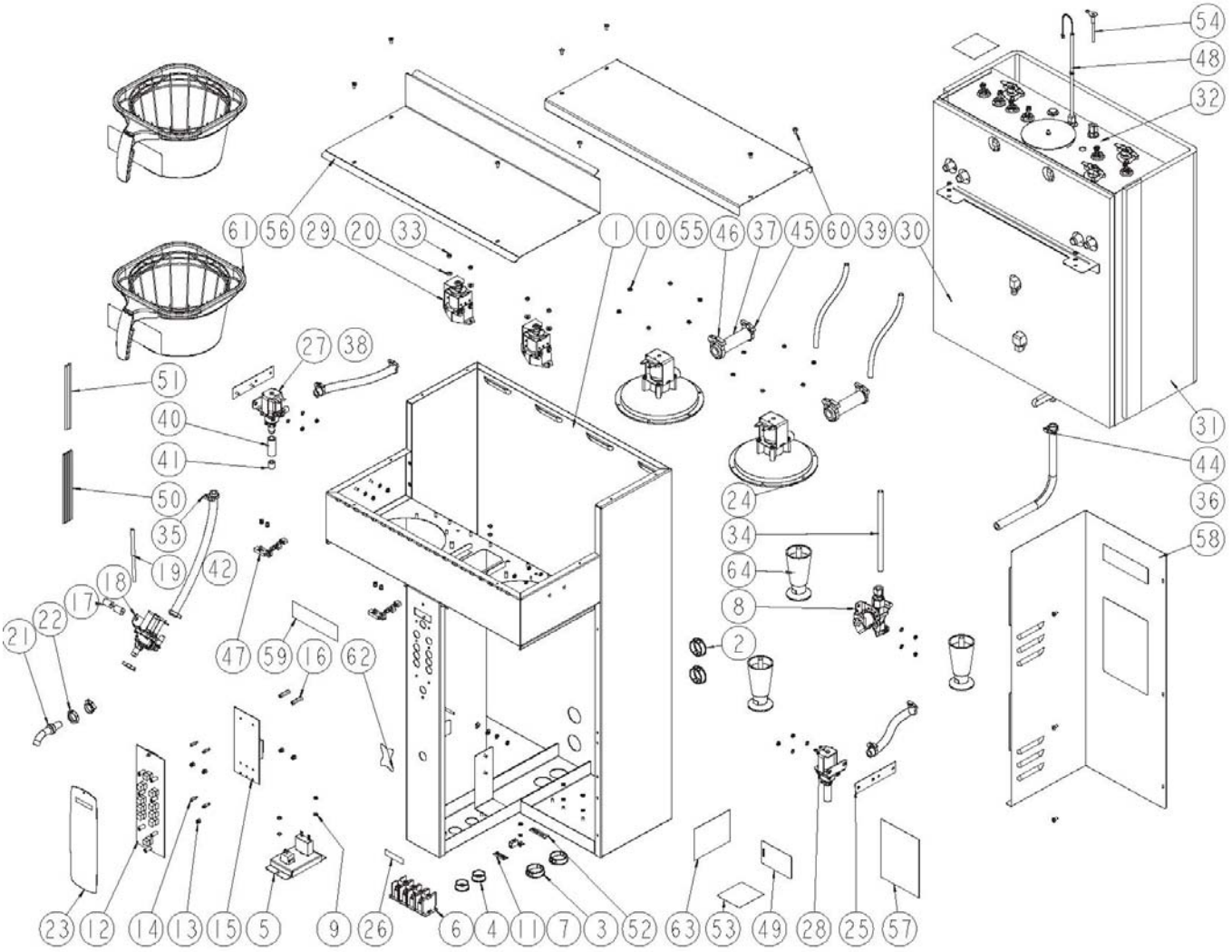

DWG 101197-B

ITEM #	QTY	OLD PART #	NEW PART #	DESCRIPTION	
2	2	86021	1086.00011.00	BUSHING, SNAP, 1.375 MTG HOLE	
3	2	86018	1086.00019.00	PLUG, DOME, 1.375 MOUNTING HOLE	
4	2	86032	1086.00004.00	BUSHING, SNAP, 1" MOUNTING HOLE DIA	
5	1	102189	1102.00106.00	ASSEMBLY, POWER BRACKET, CBS-2000e	
5	1	52026	1052.00007.00	CIRCUIT BREAKER, 5A	
5	1	58054	1058.00014.00	SWITCH, PUSH BUTTON	
6	1	102104		ASSEMBLY, TERMINAL BLOCK	
7	1	65002	1065.00002.00	CONNECTOR, COPPER LUG	
8	1	57001	1057.00011.00	FILL VALVE ASSY., S-45, 120VAC	
8	1	57022	1057.00026.00	FILL VALVE ASSY., S-45, 220VAC	EXPORT 220V ONLY
9	18	83026	1083.00011.00	WASHER, INTERNAL TOOTH LOCK, #8 SCREW SIZE,	
10	32	84002	1084.00006.00	NUT, HEX, #8-32 MACHINE SCREW	
12	1	108005	1108.00005.00	SWITCHING / CONTROL BOARD,10 KEYS, D3P (CBS-2052e)	
12	1	108065		SWITCHING / CONTROL BOARD,10 KEYS, D3P (CBS-2052e20)	
13	9	29007	1029.00006.00	NUT, #4-40 KNURLED THUMB	
14	4	15007	1084.00023.00	STANDOFF, MALE-FEMALE, THREADED HEX 4-40-1/2"	
15	1	51042	1051.00011.00	BOARD, POWER SUPPLY-120VAC	
15	1	51055		BOARD, POWER SUPPLY-220VAC	EXPORT 220V ONLY
16	2	29019	1029.00012.00	SPACER, .25" HEX x 1" LG., FEM, #4-40 THREAD	
17	2	29020	1029.00007.00	SPACER, HOT WATER VALVE	
18	1	102192	1102.00108.00	ASSEMBLY, HOT WATER VALVE, 120VAC	
18	1	102193	1102.00130.00	ASSEMBLY, HOT WATER VALVE, 220VAC	EXPORT 220V ONLY
18		57073	1057.00014.00	VALVE REBUILD KIT, DSV11. (PLUNGER, SPRING, AND DIAPHRAGM)	
19	1	102202		ASSEMBLY, WATER LEVEL PROBE, CBS-2040, -50e	

20	6	83051	1083.00016.00	WASHER, #8 SCREW SIZE, FLAT	
21	1	002065	1112.00093.00	WELDMENT, HOT WATER FAUCET	
22	1	33007	1013.00030.00	LOCKNUT, 7/16 STRAIGHT PIPE THREAD	
23	1	45082	1045.00010.00	OVERLAY, CBS-2052e	
24	2	102102		ASSEMBLY, LARGE SPRAY HEAD, 120V (SEE FIG 5)	
24	2	102159		ASSEMBLY, LARGE SPRAY HEAD, 220V (SEE FIG 5)	EXPORT 220V ONLY
25	2	102147	1112.00094.00	WELDMENT, BRACKET BY-PASS VALVE	
26	1	46029	1046.00019.00	LABEL, POWER SWITCH	
27	1	57043	1057.00019.00	VALVE, BYPASS RIGHT 120 VAC	
27	1	57076	1057.00030.00	VALVE, BYPASS RIGHT 220 VAC	EXPORT 220V ONLY
27		57073	1057.00014.00	VALVE REBUILD KIT, DSV11. (PLUNGER, SPRING, AND DIAPHRAGM)	
28	1	57044	1057.00020.00	VALVE, BYPASS LEFT 120 VAC	
28	1	57077	1057.00029.00	VALVE, BYPASS LEFT 220 VAC	EXPORT 220V ONLY
28		57073	1057.00014.00	VALVE REBUILD KIT, DSV11. (PLUNGER, SPRING, AND DIAPHRAGM)	
29	2	101160	1102.00047.00	ASSEMBLY, BREW BASKET LOCK. 120 VAC	
29	2	101174	1102.00135.00	ASSEMBLY, BREW BASKET LOCK. 220 VAC	EXPORT 220V ONLY
30	1	22036	1022.00030.00	INSULATION-FRONT, TANK CBS-2052	
31	1	22037	1022.00031.00	INSULATION, TANK-BACK CBS-2052	
32	1	104026	1104.00014.00	ASSEMBLY, TANK CBS-2052e (SEE FIG. 4)	
33	4	84030	1084.00015.00	LOCKNUT, #8-32 SCREW SIZE, HEX THIN NYLON INSERT	
34	1	32050	1013.00046.00	TUBE, COLD WATER (CBS-2052e)	
34	1	13122	1013.00047.00	TUBE, COLD WATER (CBS-2052e20)	
35	4	86007	1086.00001.00	CLAMP, HOSE, .593"-.656" DIA RANGE	
36	1	25046	1025.00010.00	TUBE, 5/8"OD X 3/8"ID X 15"LG, DRAIN	
37	2	25045	1025.00021.00	TUBE, 31/32"OD X 5/8"ID X 4 1/4" LG, BREW	
38	2	25044	1025.00023.00	TUBE, 5/8"OD X 3/8"ID X 7.5"LG, BY-PASS	
39	2	25042	1025.00025.00	TUBE, 1/2"OD X 1/4"ID X 7 1/2" LG, VENT	
40	2	25060	1025.00022.00	TUBE 5/8"OD X 3/8"ID X 1.5"LG, BY-PASS	
41	2	25061	1025.00024.00	TUBE 1/2"OD X 1/4"ID X 1/2""LG, BY-PASS	
42	1	25106	1025.00028.00	TUBE, 5/8"OD X 3/8"ID X 11"LG, HOT WATER VALVE INLET	
43	1	25105	1025.00027.00	TUBE, 5/8"OD X 3/8"ID X 2.5"LG, HOT WATER VALVE OUTLET	
44	5	86038	1086.00002.00	CLAMP, HOSE, .670"-.780" DIA RANGE	
45	2	86036	1086.00018.00	CLAMP, HOSE, .875"-1.0" DIA RANGE	
46	2	86039	1086.00017.00	CLAMP, HOSE, 1.031"-1.187" DIA RANGE	
47	2	102207	1102.00113.00	ASSEMBLY, REED SWITCH	
48	1	102172	1102.00010.00	ASSEMBLY, PROBE DIGITAL TEMPERATURE 8.0" LG	
49	1	44019		LABEL, SINGLE PHASE CONFIGURATION	
50	1	402013	1402.00014.00	HARNESS ELECTRICAL, CBS-2052e, (THREE HEATERS)	
51	1	402028	1402.00013.00	HARNESS, ELECTRICAL, THREE HEATER WIRE SET. CBS-2052e	
52	1	44022	1044.00005.00	LABEL, CONNECTION WARNING FOR 3 PH	
53	2	44024	1044.00004.00	LABEL, WARNING-HIGH VOLTAGE	
54	1	102202		ASSEMBLY, WATER LEVEL PROBE, CBS-2040, -50e	
55	1	01445	1001.00046.00	COVER, TOP CBS-2052e	
56	1	01446	1001.00047.00	COVER, UPPER BASE CBS-2052e	
58	1	102194	1102.00105.00	ASSEMBLY, RIGHT COVER (CBS-2050e)	
58	1	102286		ASSEMBLY, RIGHT COVER (CBS-2050e20)	
59	1	46027		LABEL, SPRAY HOUSING	
60	11	82059	1082.00023.00	SCREW, #8-32 X 3/8 TRUSS HD PHIL., MACHINE	
61	2	101165	B001280B1	ASSEMBLY, BREW BASKET, 16" X 6", 0.280" HOLE (SEE FIG 6)	
64	3	73011	1073.00007.00	LEG, FLANGE FOOT, 4" HIGH	

Figure 4 – CBS-2052e / 2052e20 Tank Assembly

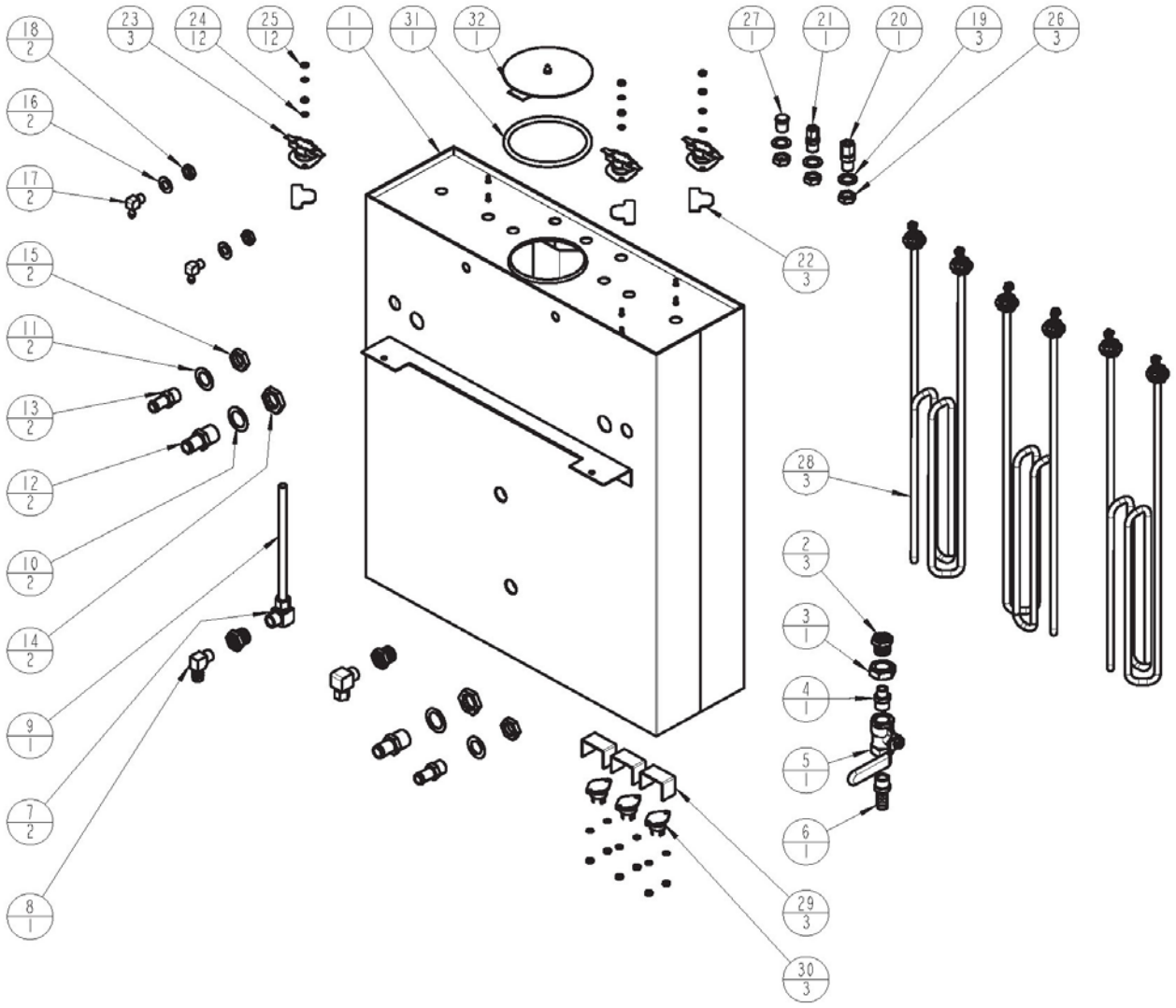

DWG 104026-A

ITEM #	QTY	OLD PART #	NEW PART #	DESCRIPTION
1	1	004038	1114.00019.00	WELDMENT, TANK CBS-2052e
2	3	31021	1031.00029.00	BUSHING, 3/4-16 X 1/4 NPSM, HEX HEAD
3	1	84007	1084.00022.00	NUT, 3/4-16 HEX JAM
4	1	31082	1031.00026.00	FITTING, HEX NIPPLE, 3/8 MPT X 1/4 MPT
5	1	34004	1034.00002.00	VALVE, BALL 3/8 FPT X 3/8 FPT
6	1	31054	1031.00025.00	FITTING, 1/2 HOSE ID X 3/8 MPT
7	2	31027	1031.00030.00	FITTING, COMPR 90° MALE ELBOW, 3/8 TUBE OD X 1/4 MPT
8	1	31128	1031.00031.00	FITTING, 90° ELBOW, 3/8 HOSE ID X 1/4 MPT
9	1	13072	1013.00045.00	OUTLET, INSIDE TANK HOT WATER
10	2	83048	1083.00032.00	WASHER, 1.250"OD X 0.835"ID FLAT
11	2	83043	1083.00007.00	WASHER, 1.125"OD X 0.688"ID FLAT
12	2	31150	1031.00027.00	FITTING, 5/8 HOSE ID X 1/2 MPT
13	2	31077	1031.00028.00	FITTING, 3/8 HOSE ID X 3/8 MPT
14	2	31151	1031.00034.00	LOCKNUT 1/2 STRAIGHT PIPE THREAD
15	2	31118	1031.00033.00	LOCKNUT 3/8 STRAIGHT PIPE THREAD
16	2	83041	1083.00014.00	WASHER, .812"OD X .412"ID, FLAT
17	2	31005	1031.00032.00	FITTING, 90° ELBOW, 1/4 HOSE ID X 1/8 MPT
18	2	31116	1031.00020.00	LOCKNUT 1/8 STRAIGHT PIPE THREAD
19	3	83042	1083.00006.00	WASHER, .875"OD X .562"ID, FLAT
20	1	25098	1025.00001.00	FITTING, COMPRESSION MALE CONNECTOR
21	1	31036		FITTING COMPR. MALE CONNECTOR 1/4 TUBE OD X 1/4 MPT

22	3	03332	1003.00005.00	BRACKET 2, ONE SHOT THERMOSTAT
23	3	53071	1053.00004.00	THERMOSTAT, SINGLE SHOT,TRIAC
24	12	83011	1083.00009.00	WASHER, #6 SCREW SIZE, INTERNAL
25	12	84001	1084.00012.00	NUT, HEX, #6-32 MACHINE SCREW
26	3	31117	1031.00007.00	LOCKNUT 1/4 STRAIGHT PIPE THREAD
27	1	31081		PLUG, HEX HEAD 1/4" MPT
28	3	107002		HEATER ASSY., 3000W, 240VAC
28	3	107018		HEATER ASSY., 5000W, 240VAC
29	3	03297	1003.00006.00	SINK, HEAT FOR 40A TRIAC
30	3	59008	1059.00001.00	TRIAC 40A, 600V
31	1	24002	1024.00007.00	O-RING, TANK COVER
32	1	102013	1102.00007.00	ASSEMBLY, TANK COVER

Figure 5– Spray Housing Assembly, 120 VAC, For units after 2010

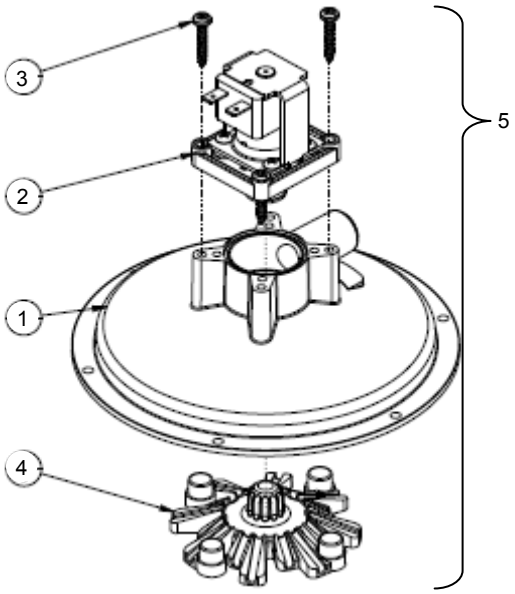

#	Qty	Part Number	Description
1	1	1102.00116.00	SPRAY HOUSING
2	1	1102.00117.00	BREW VALVE, 120 VAC
2	1	1102.00120.00	BREW VALVE, **240 VAC EXPORT ONLY**
2	1	1102.00122.00	BREW VALVE, **200 VAC EXPORT ONLY**
3	4	1082.00056.00	SCREW, #8-11 X 1" PAN HD PHIL, Thread Forming
4	1	1102.00043.00	CASCADE SPRAY DOME, CBS-2050/60'S
			COMPLETE SPRAY HOUSING ASSEMBLY
5		1102.00118.00	COMPLETE SPRAY ASSEMBLY, CBS-2050 120VAC
5		1102.00121.00	COMPLETE SPRAY ASSEMBLY, 240VAC **EXPORT ONLY**
5		1102.00123.00	COMPLETE SPRAY ASSEMBLY,200VAC **EXPORT ONLY**

Figure 5 A– Spray Housing Assembly, 120 VAC, Part # 102102 (For units before 2010)
Spray Housing Assembly, 220 VAC, Part # 102159 (EXPORT ONLY)

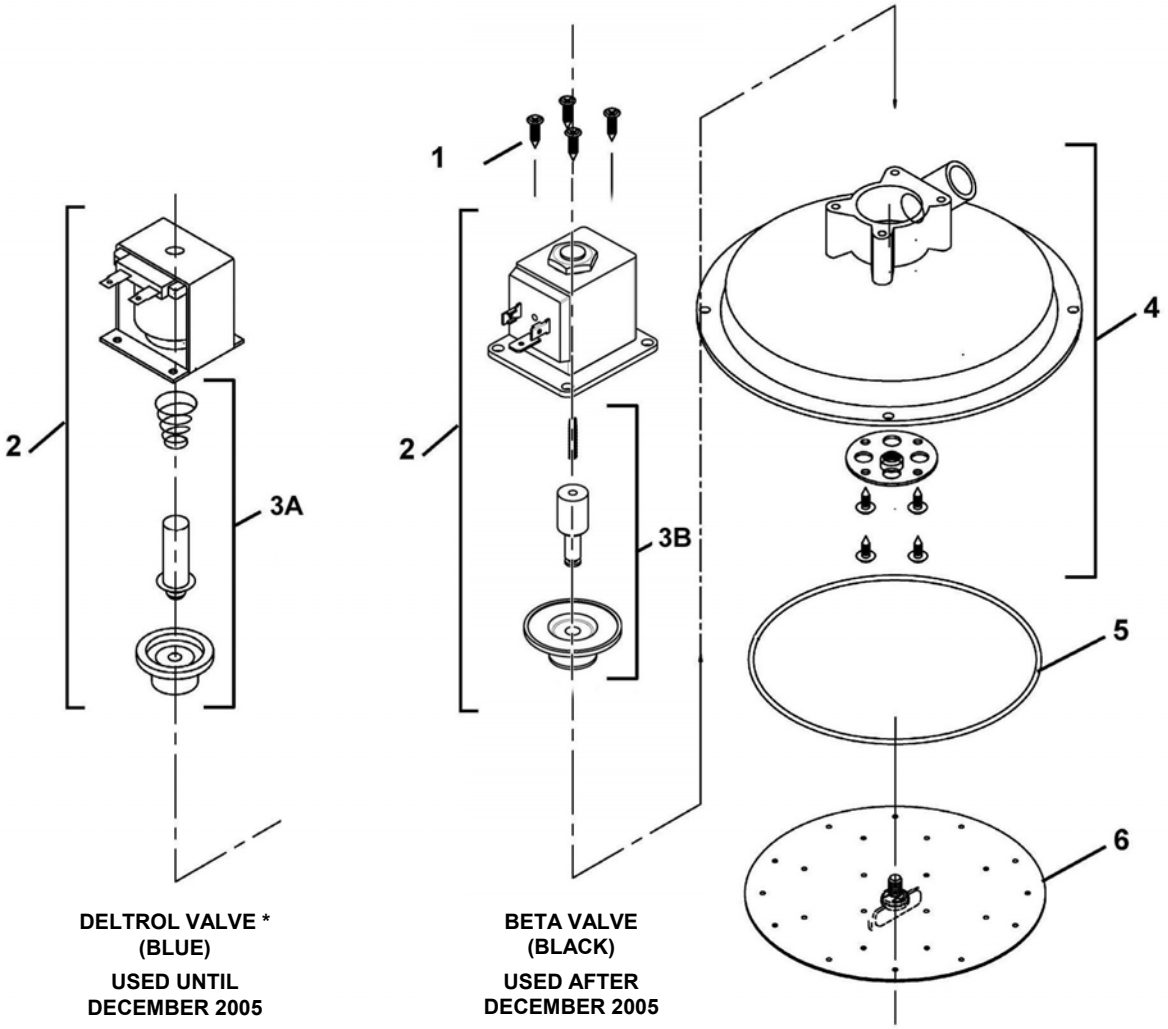

ITEM #	QTY	OLD PART #	NEW PART #	DESCRIPTION	
1	4	82112		#8 X 3/4" PAN HD. PHIL. T.S. 18-8 S.S. SCREW	
2*	1	K054	1000.00054.00	BREW VALVE REPLACEMENT KIT, 120VAC	
2*	1	K055	1000.00055.00	BREW VALVE REPLACEMENT KIT, 230VAC	EXPORT 220V ONLY
3A	1	57072		VALVE REBUILD KIT, DSV-10 *(FOR BLUE DELTROL VALVES ONLY)*	
3B	1	K057	1000.00057.00	VALVE REBUILD KIT, BETA *(FOR BLACK BETA VALVES ONLY)*	
4	1	102113		SPRAY HOUSING ASSY.	
5	1	24035		O-RING, 5.5 I.D. X 5 11/16 O.D. X 3/32	
6	1	102108		SPRAY PLATE ASSY., 5 7/8" DIA.	

*** ITEM # 2: REPLACEMENT DELTROL VALVES ARE NO LONGER AVAILABLE.**
USE BETA VALVE, PART # K054 OR K055.

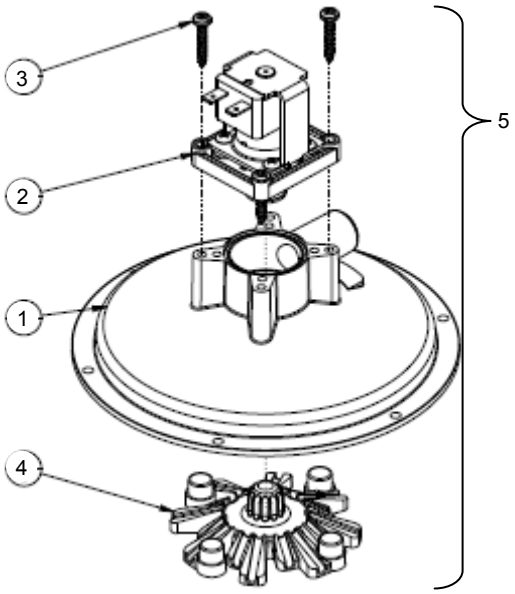

#	Qty	Part Number	Description
1	1	1102.00116.00	SPRAY HOUSING
2	1	1102.00117.00	BREW VALVE, 120 VAC
2	1	1102.00120.00	BREW VALVE, **240 VAC EXPORT ONLY**
2	1	1102.00122.00	BREW VALVE, **200 VAC EXPORT ONLY**
3	4	1082.00056.00	SCREW, #8-11 X 1" PAN HD PHIL, Thread Forming
4	1	1102.00043.00	CASCADE SPRAY DOME, CBS-2050/60'S
			COMPLETE SPRAY HOUSING ASSEMBLY
5		1102.00118.00	COMPLETE SPRAY ASSEMBLY, CBS-2050 120VAC
5		1102.00121.00	COMPLETE SPRAY ASSEMBLY, 240VAC **EXPORT ONLY**
5		1102.00123.00	COMPLETE SPRAY ASSEMBLY,200VAC **EXPORT ONLY**

Figure 6 – Brew Basket Assembly, 16” X 6”, Part # 101165

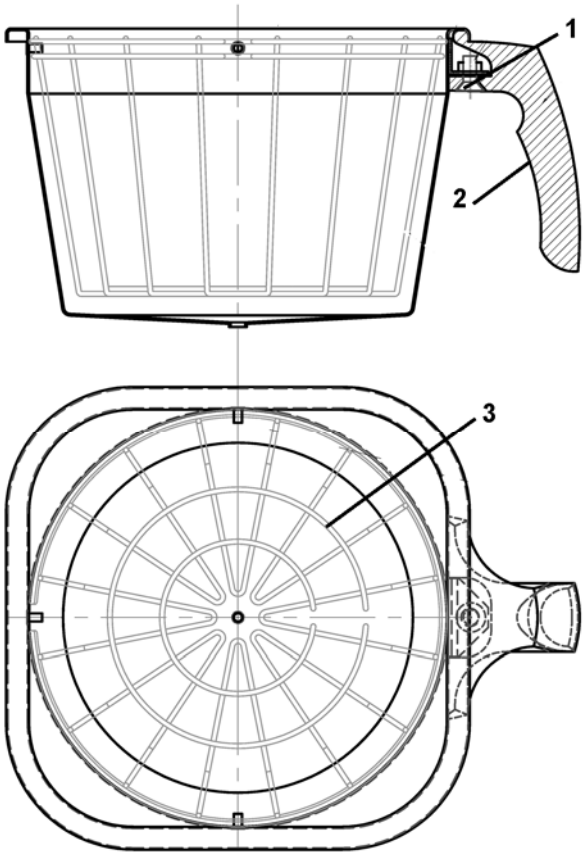

ITEM	PART #	New PART #	DESCRIPTION
1	82096	1082.00040.00	HANDLE SCREW
2	23117	1023.00089.00	BREW BASKET HANDLE, BLACK (includes magnet)
3	9006		WIRE INSERT, 16 X 6
NOT SHOWN	46011	1046.00007.00	WARNING LABEL
NOT SHOWN	F001		PAPER FILTERS, 15” X 5.5” 500 PER CASE

COLOR BREW BASKET HANDLES

PART #	New PART #	DESCRIPTION
23106	1023.00087.00	BREW BASKET HANDLE, GREEN
23107	1023.00088.00	BREW BASKET HANDLE, ORANGE
23148	1023.00090.00	BREW BASKET HANDLE, RED